Paris

CH-7200~CH-7211

Our Paris fixtures come in basic configurations: ceiling, pendant, chandelier, etc. They feature tilting gimbal ring holders that also spin up to 358º for complete aiming options. The single ceiling and wall units are compact flood and spot lights, meant for independent aiming adjustments including left and right of stage areas. Paris comes in a variety of colors, grill diffusers, and lamping options. For difficult-to-access areas, we strongly recommend you consider our LED options. The chips and reflectors we use will make focusing a dream. And the LED's themselves will make lamp maintenance a thing of the past.

~Paris Series~

- Chandelier: CH-7200~CH-7211
- Pendant: PD-7200~PD-7231
- Ceiling Mt: CL-7200~CL-7211
- Wall Mt: SC-7200~SC-7211
- Bollard: BL-7200~BL-7211

Mounting: Lightsmith fixtures mount to standard 4" octagon electrical boxes unless otherwise specified. All hardware and canopies supplied.

Listing and Warranty: Lightsmith fixtures are Underwriters Laboratories listed and carry a standard three year warranty against defects in materials and labor beginning at date of shipment.

MADE IN USA

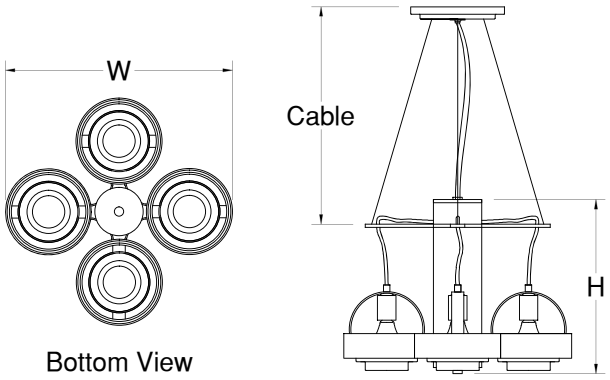

CH-72__ Fixture Number

Job Type

Job Name

Notes~Modifications

	Fixture Number	Dimensions	Lamping	Weight	Cable	Options
LED	☐ CH-7200	25w x 14h	4-23wCLED (2790 lumens)	19 lbs	4' Std	L131,BLC,BLR,CEM
	☐ CH-7201	32w x 14h	6-38wCLED (4555 lumens)	24 lbs	6' Std	L331,BLC,BLR,CEM
	☐ CH-7202	36w x 18h	4-52wCLED (6070 lumens)	31 lbs	8' Std	L431,BLC,BLR,CEM
	☐ CH-7203	42w x 18h	6-83wCLED (8650 lumens)	34 lbs	10' Std	L531,BLC,BLR,CEM DALI,REM,FUS**
INCANDESCENT	☐ CH-7204	25w x 14h	4-150wP38 (1740 lumens)	14 lbs	4' Std	NA
	☐ CH-7205	32w x 14h	6-200wP46 (2270 lumens)	20 lbs	6' Std	NA
	☐ CH-7206	36w x 18h	4-300wP56 (3840 lumens)	25 lbs	8' Std	NA
	☐ CH-7207	42w x 18h	6-500wP64 (5500 lumens)	30 lbs	10' Std	NA
FLUORESCENT	☐ CH-7208	25w x 14h	4-26wCFT (1800 lumens)	18 lbs	4' Std	BLC,BLR,CEM
	☐ CH-7209	32w x 14h	6-32wCFT (2400 lumens)	23 lbs	6' Std	BLC,BLR,CEM
	☐ CH-7210	36w x 18h	4-42wCFT (3200 lumens)	30 lbs	8' Std	BLC,BLR,CEM
	☐ CH-7211	42w x 18h	6-57wCFT (4300 lumens)	33 lbs	10' Std	BLC,BLR,CEM DIM,REM,FUS*

~Multiple Circuits Standard Wiring~

*All Fluorescent Fixtures
**All LED Fixtures

DIFFUSER

- ☐ **HNL:** Honeycomb Lens
- ☐ **CRL:** Concentric Ring Louver
- ☐ **NOL:** No Louver/Lens

METAL FINISH

SOLID BRASS FINISHES	PAINTED METAL FINISHES	ALUMINUM FINISHES	STAINLESS STEEL FINISHES
☐ **ABB:** Antique Brass	☐ **DGP:** Dark Green	☐ **SAA:** Satin Aluminum	☐ **SSS:** Satin
☐ **SBB:** Satin Brass	☐ **VGP:** Verde Green	☐ **SNA:** Satin Nickel	☐ **DSS:** Distressed
☐ **PBB:** Polished Brass	☐ **CGP:** Charcoal Gray	☐ **PAA:** Polished Aluminum	☐ **PSS:** Polished
☐ **ANB:** Antique Nickel	☐ **MBP:** Medium Bronze	☐ **BBA:** Burnished Bronze	☐ **HSS:** Hammered
☐ **SNB:** Satin Nickel	☐ **SBP:** Satin Black	☐ **RNA:** Red Naval Bronze	
☐ **PNB:** Polished Nickel	☐ **DBP:** Dark Bronze	☐ **SGA:** Satin Gold	
☐ **AZB:** Antique Bronze	☐ **LBP:** Light Bronze	☐ **SBA:** Satin Bronze	
☐ **SZB:** Satin Bronze	☐ **MGP:** Medium Gold	☐ **ORA:** Oil Rubbed Bronze	
☐ **PZB:** Polished Bronze	☐ **SCP:** Sponged Copper	☐ **SCA:** Satin Copper	
☐ **CSB:** Custom Brass*	☐ **CSP:** Custom Paint*	☐ **CSA:** Custom Aluminum*	☐ **CSS:** Custom SS*

OPTIONS

- ☐ **BLC:** Canopy Ballast (Std)
- ☐ **BLR:** Remote Ballast
- ☐ **CEM:** Canopy Emer. Ballast
- ☐ **DIM:** Dimming Ballast
- ☐ **L131:** 1-31wCLED Downlight
- ☐ **L331:** 3-31wCLED Downlight
- ☐ **L431:** 4-31wCLED Downlight
- ☐ **L531:** 5-31wCLED Downlight
- ☐ **FUS:** Fusing
- ☐ **REM:** Remote Emer.Ballast
- ☐ **DALI:** Dali dimming LED

Fixture Specifications

CH-72__	~		~		~		~	CB-___	~		~	
FIXTURE NUMBER (Example: CH-7202)		DIFFUSER (Example: HNL)		METAL FINISH (Example: ABB)		VOLTAGE ☐ (120V) ☐ (277V) ☐ (347V)		Cable=CB+Lgth (Example:CB-96")		OPTIONS (Example:DIM,REM)		MODIFICATIONS (Example:Custom Paint*) Use "Notes" Box At Top To Explain Modifications

Lightsmith
www.ltsmth.com
Manufacturers of Fine Custom Lighting ~ Ph:434-528-5809 ~ Fx:434-845-7907 ~ Web:Info@Ltsmth.com

©2012 Lightsmith